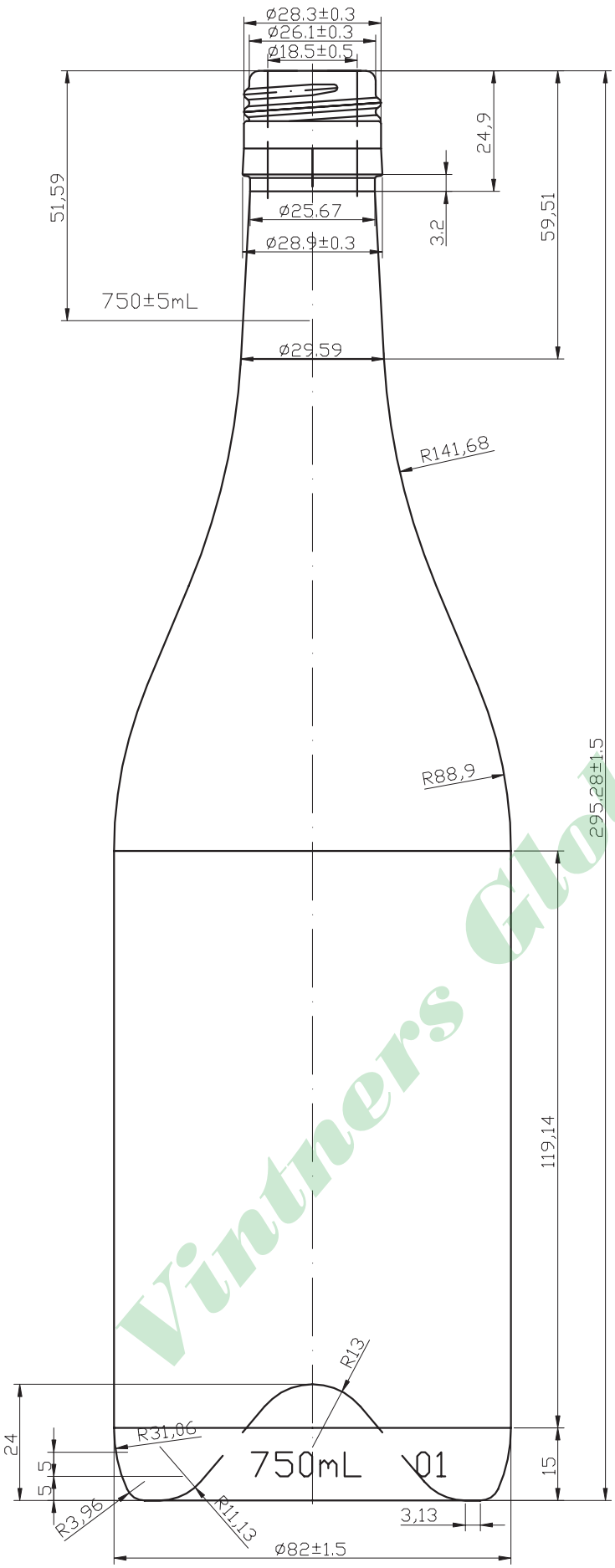

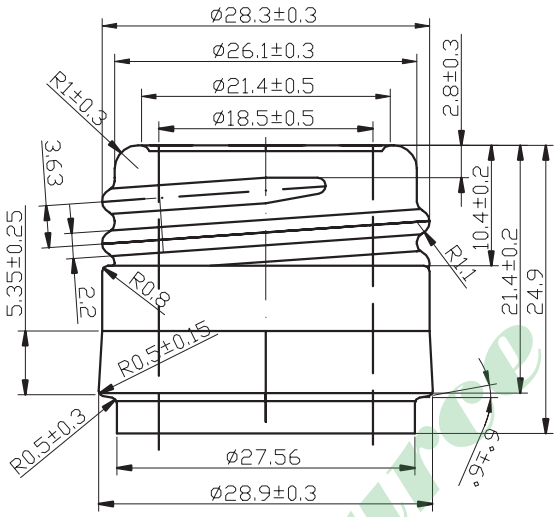

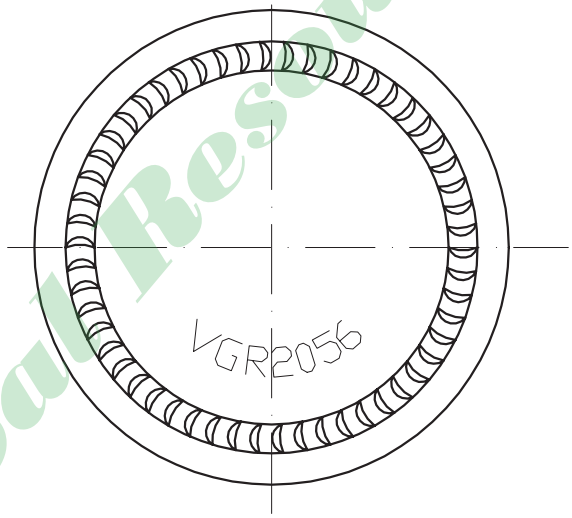

Item		Specification
Capacity		750±10mL
Brim.Cap.		765±10mL
Weight		540±15g
Height		295±1.5mm
Diameter		82±1.5mm
Neck Finish	Thread Diameter	3.63 mm
	Finish Height	21.4±0.2mm
	Outside Diameter	28.9±0.3mm
	Inner Diameter	18.5±0.5mm

Design		M1:1
Drawn		
Check		
Item No.	VGR 205-6	
Product	750mL Burgundy	

VINTNERS GLOBAL RESOURCE

Vintners Global Resource

© (2009) copying or use of this drawing without permission is prohibited