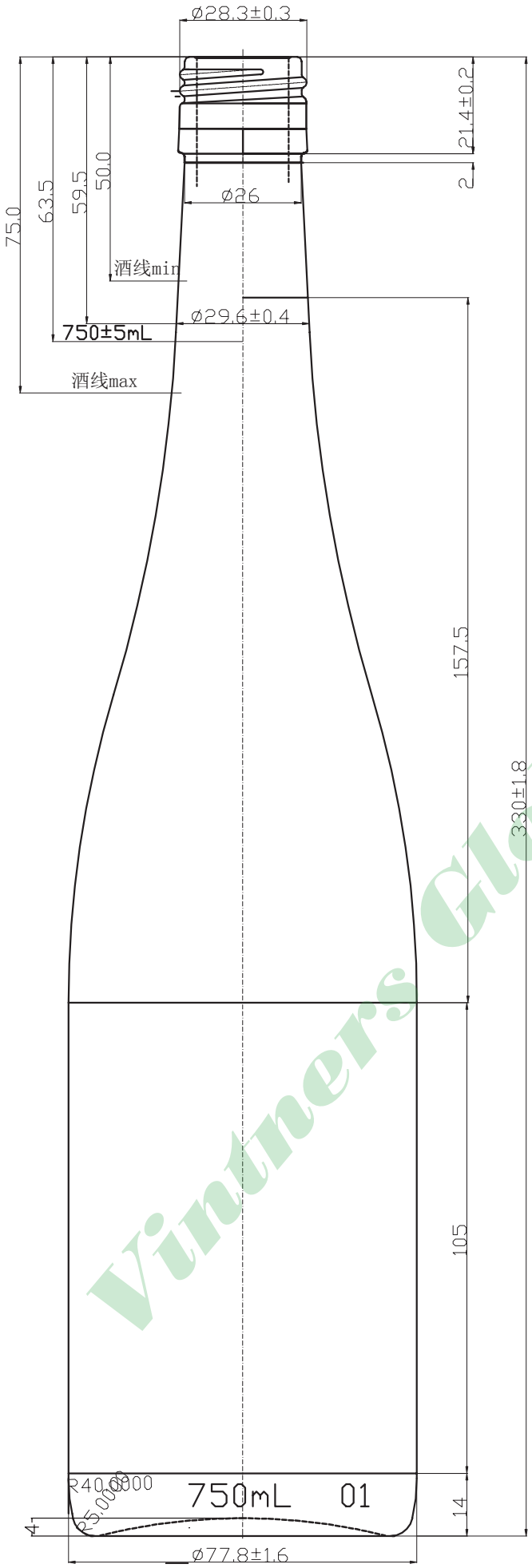

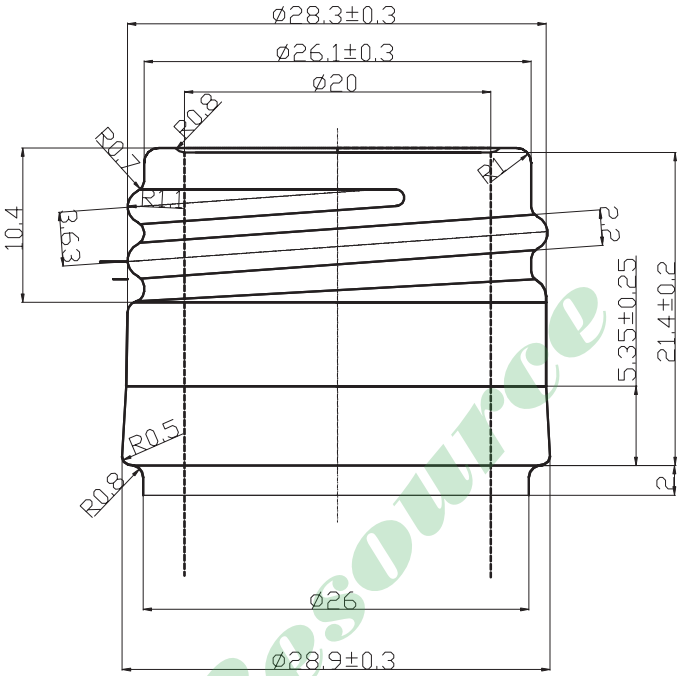

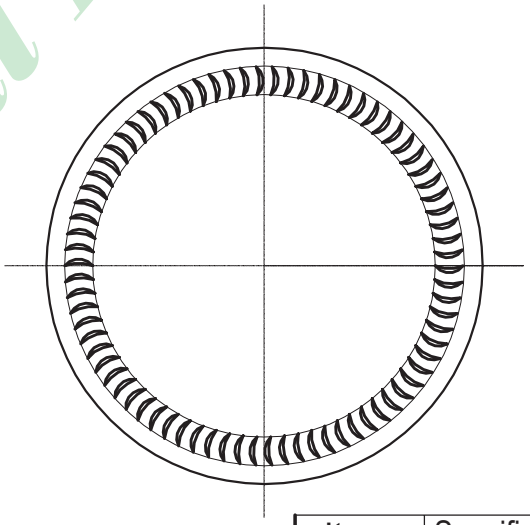

Item		Specification
Capacity		750 mL
Brim.Cap.		770±10 mL
Weight		530±25 g
Height		330±1.8 mm
Diameter		77.8±1.6 mm
Neck Finish	Thread Diameter	3.63 mm
	Finish Height	28.9±0.3 mm
	Outside Diameter	21.4±0.2 mm
	Inner Diameter	20 mm

Design		M1:1
Drawn		
Check		
Item No.	VGR 305-6	
Product	750 ml Hock	

VINTNERS GLOBAL RESOURCE

Vintners Global Resource

© (2009) copying or use of this drawing without permission is prohibited